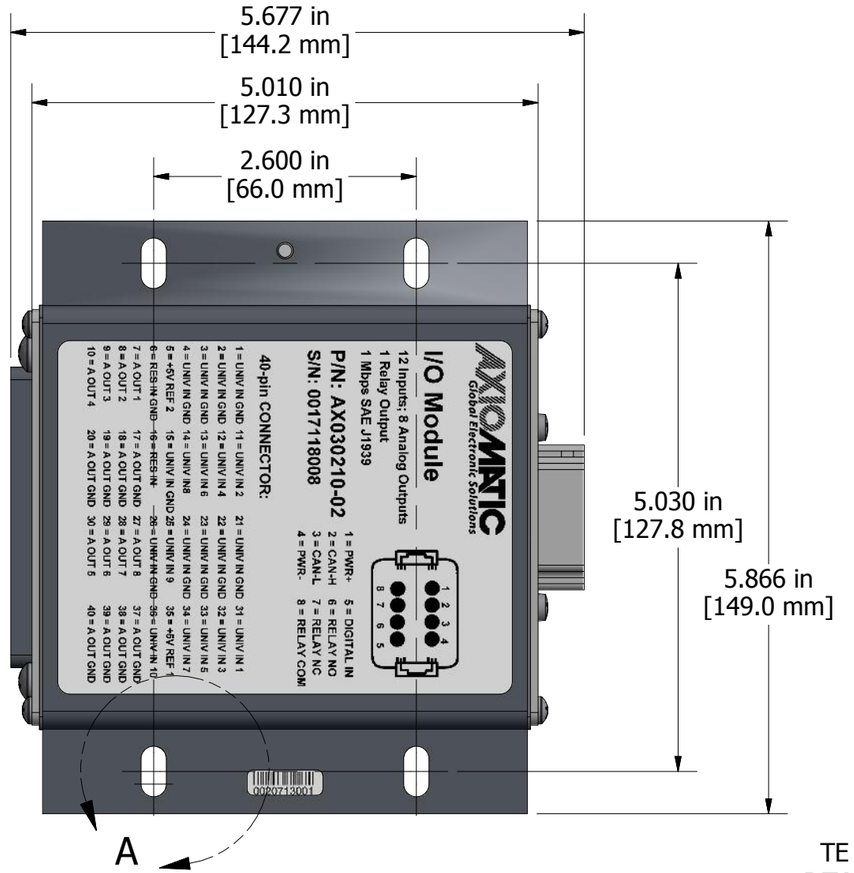


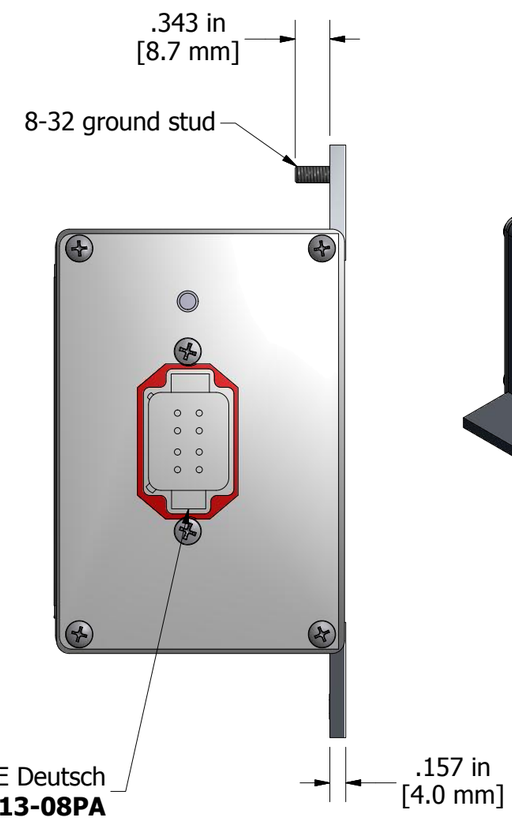

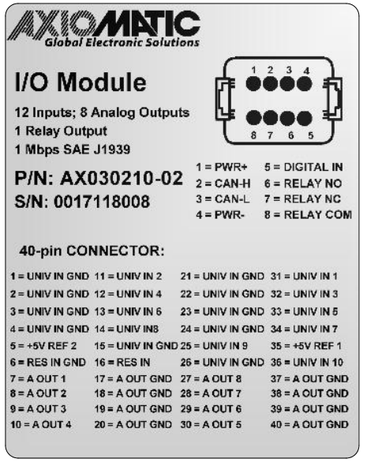


unit label detail

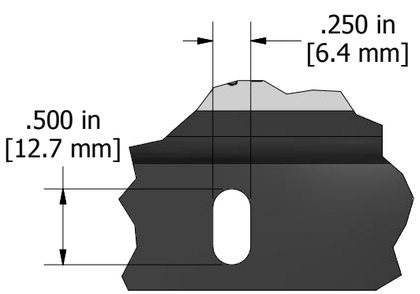


**DETAIL A**
**4 places**

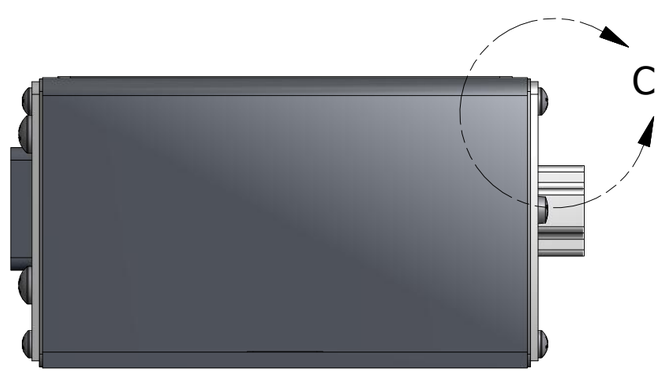


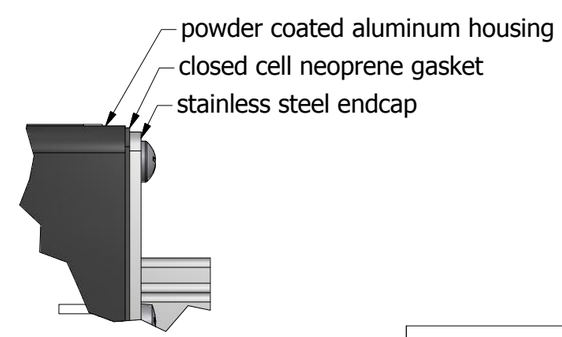


**DETAIL C**

PROPRIETARY
THE INFROMATION CONTAINED IN THIS DRAWING IS CONDIFENTIAL AND PROPRIETARY AND REMAINS THE EXCLUSIVE PROPERTY OF AXIOMATIC TECHNOLOGIES CORPORATION. THIS DRAWING MAY NOT BE USED, REPRODUCED IN WHOLE OR IN PART, NOR REVEALED TO OTHERS WITHOUT THE PRIOR WRITTEN CONSENT OF AXIOMATIC TECHNOLOGIES CORPORATION. BY ACCEPTANCE OF THIS DRAWING, THE BEARER AGREES TO THE THESE CONDITIONS.

AXIOMATIC TECHNOLOGIES CORPORATION
5915 WALLACE ST.
MISSISSAUGA, ON
CANADA L4Z1Z8
905-602-9270

TOLERANCES INCH

| fabrication | | machining | |
|---|---|---|---|
| X.XXX | +/- 0.015 | X.XXX | +/- 0.001 |
| X.XX | +/- 0.031 | X.XX | +/- 0.005 |
| X.X | +/- 0.031 | X.X | +/- 0.015 |
| fractional | +/- 0.031 | fractional | +/- 0.031 |

| | | | | | |
|---|---|---|---|---|---|
| MATERIAL | DRAWN TF | DATE 7/27/2018 | TITLE IO Module, 12 Input, 8 Signal Output, Single Relay Output, J1939 1 mbps | | |
| FINISH | CHECKED DL | DATE | DWG REV D1 | DWG NO AX030210-02-MD | PART REV A |
| | APPROVED DL | DATE | SCALE full | PART NO AX030210-02 | SHEET 1 of 1 |