REVISION HISTORY			
REV	DESCRIPTION	DATE	APPROVED
A-D1	initial release	September 13-2024	GDV
A-D2	updated wire colours	October 23-225	GDV

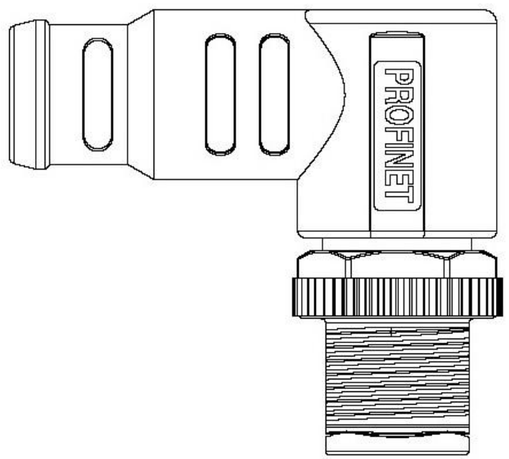

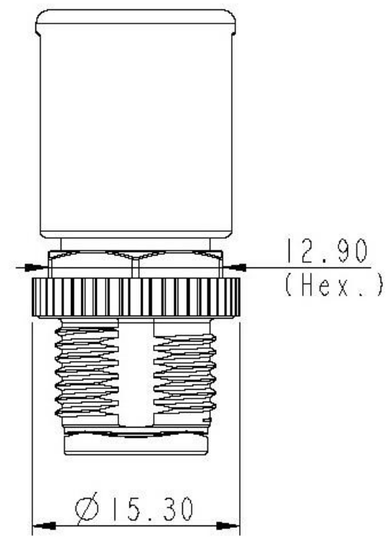

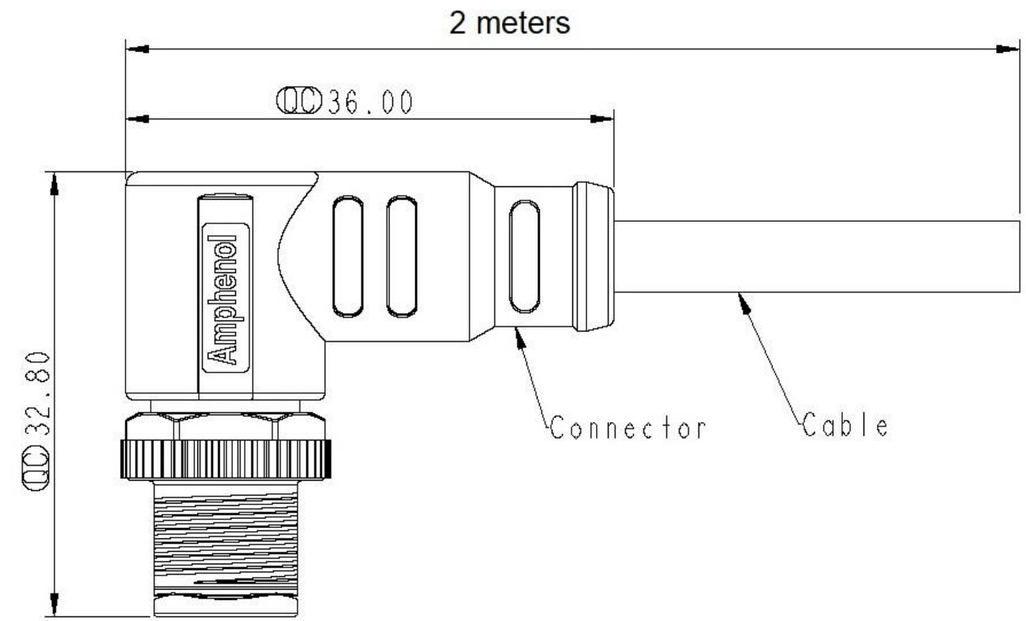

Shield	Braid 編織
4	Blue 藍
3	Orange 橘
2	White 白
1	Yellow 黃
Connector	Wire Color

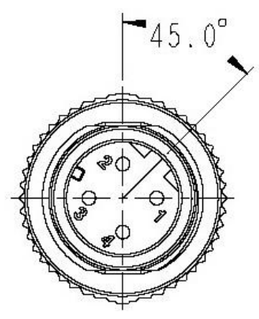

Note:
* RoHS Compliant
* Important dimension
* Waterproof rate: IP68, mated 1m/24h, IP69K mated
* Connector
  Housing: Thermoplastic, Black
  Pin: Copper alloy, Gold plated
  Nut: Metal
  Outer mold: Thermoplastic, Black
* Cable: UL20549, CAT-5E, 22#*4C+AL/MY+B+F,
  OD=6.5mm, TPU Jacket, Green

PROPRIETARY
THE INFROMATION CONTAINED IN THIS DRAWING IS CONDIFENTIAL AND PROPRIETARY AND REMAINS THE EXCLUSIVE PROPERTY OF AXIOMATIC TECHNOLOGIES CORPORATION. THIS DRAWING MAY NOT BE USED, REPRODUCED IN WHOLE OR IN PART, NOR REVEALED TO OTHERS WITHOUT THE PRIOR WRITTEN CONSENT OF AXIOMATIC TECHNOLOGIES CORPORATION. BY ACCEPTANCE OF THIS DRAWING, THE BEARER AGREES TO THE THESE CONDITIONS.

AXIOMATIC Global Electronic Solutions
AXIOMATIC TECHNOLOGIES CORPORATION
1445 Courtneypark Dr.
MISSISSAUGA, ON
CANADA L5T2E3
905-602-9270

DIMENSIONS ARE IN mm
UNLESS OTHERWISE SPECIFIED IN DRAWING TOLERANCE ON:
X.X ±0.5
X. ±1
ANGLES ±1.0

MATERIAL: NA
FINISH: NA
THIRD ANGLE PROJECTION
TOOL: INVENTOR
SIZE: B

DRAWN: TF	DATE: 2024-09-13	TITLE: 4 position D coded male M12 cable, 2m, unterminated leads
CHECKED: TF	DATE:	DWG REV: D2 / DWG NO: AX070534-MD / PART REV: A
APPROVED: GDV	DATE:	SCALE: / PART NO: AX070534 / SHEET: 1 of 1