REVISION HISTORY					
REV	DESCRIPTION	DATE	DRAWN	QA	APPROVED
P3.1-D2	CCT SCREW CHANGE (ECN25-0064)	2025-08-05	AZ	CM	GDV

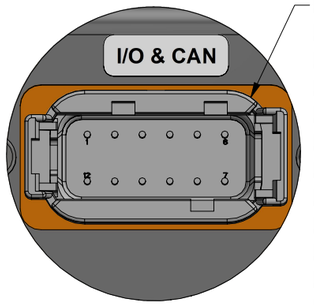

Pin 1: OUT1
Pin 2: CAN_H
Pin 3: CAN_L
Pin 4: DIN1
Pin 5: 5V_Ref
Pin 6: UI2
Pin 7: UI1
Pin 8: GND
Pin 9: STO_IN1
Pin 10: DIN2
Pin 11: GNDB
Pin 12: OUT2

Detail B

Deutsch DTM13-12PA
12-Pin Connector
Mates with
Deutsch DTM06-12SA

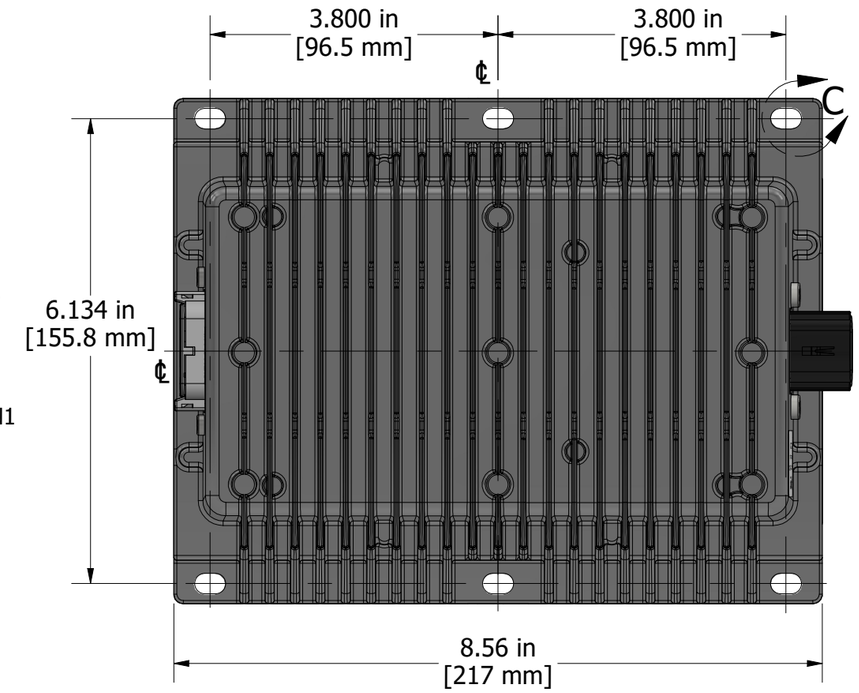

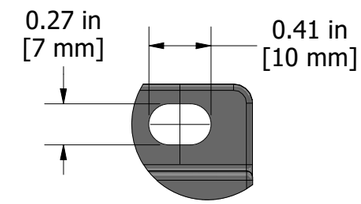

Detail C

Mounting Slots
To Suit M6 Or 1/4" Bolts

AXIOMATIC Global Electronic Solutions
Motor Controller, SAE J1939
8 Inputs, 2.5A Output, E-stop Output
P/N: AX102100

Unit Label

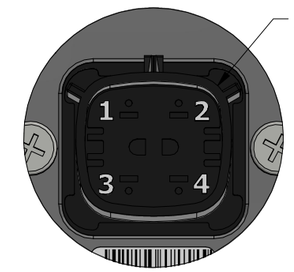

Pin 1: BATT+
Pin 2: BATT-
Pin 3: MOTOR+
Pin 4: MOTOR-

Detail A

Molex 19436-0411
4-Pin Connector
Mates with
Molex 194320001

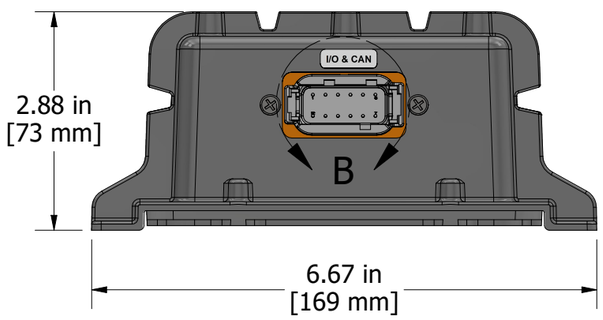

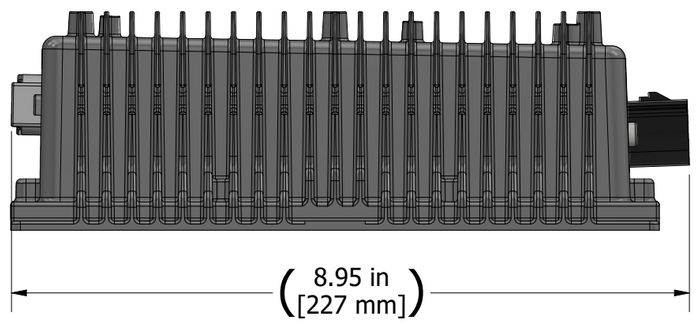

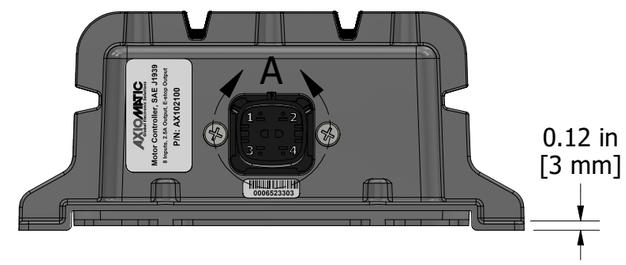

PROPRIETARY
THE INFROMATION CONTAINED IN THIS DRAWING IS CONDIFENTIAL AND PROPRIETARY AND REMAINS THE EXCLUSIVE PROPERTY OF AXIOMATIC TECHNOLOGIES CORPORATION. THIS DRAWING MAY NOT BE USED, REPRODUCED IN WHOLE OR IN PART, NOR REVEALED TO OTHERS WITHOUT THE PRIOR WRITTEN CONSENT OF AXIOMATIC TECHNOLOGIES CORPORATION. BY ACCEPTANCE OF THIS DRAWING, THE BEARER AGREES TO THE THESE CONDITIONS.

AXIOMATIC Global Electronic Solutions
AXIOMATIC TECHNOLOGIES CORPORATION
1445 COURTNEYPARK DR E
MISSISSAUGA, ON
CANADA L5T2E3
905-602-9270

DIMENSIONS ARE IN INCHES [mm]
UNLESS OTHERWISE SPECIFIED IN DRAWING TOLERANCE ON:
X.XXX [.XX] ± 0.008 [0.20]
X.XX [X.X] ± 0.02 [0.51]
(X.XX [X.X]) ± 0.04 [1.00]
ANGLES ± 1.0°
Others follow ISO 2768-2, tolerance class K

MATERIAL: NA	DRAWN: AZ	DATE: 2020-08-17	TITLE: 40A DC MOTOR CONTROLLER		
FINISH: NA	CHECKED: TF	DATE: 2020-08-20	DWG REV: D2	DWG NO: AX102100-MD	PART REV: P3.1
THIRD ANGLE PROJECTION / TOOL: INVENTOR	APPROVED: GDV	DATE: 2020-08-20	SCALE: 0.5	PART NO: AX102100	SHEET: 1 of 1
SIZE: B					